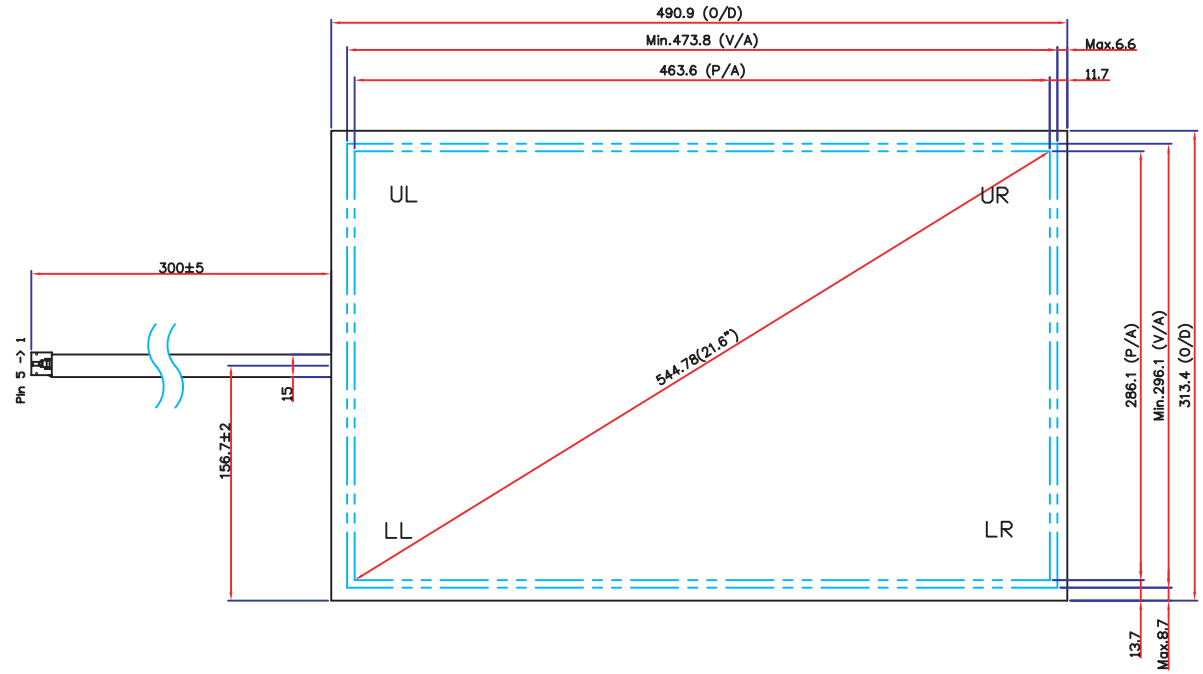

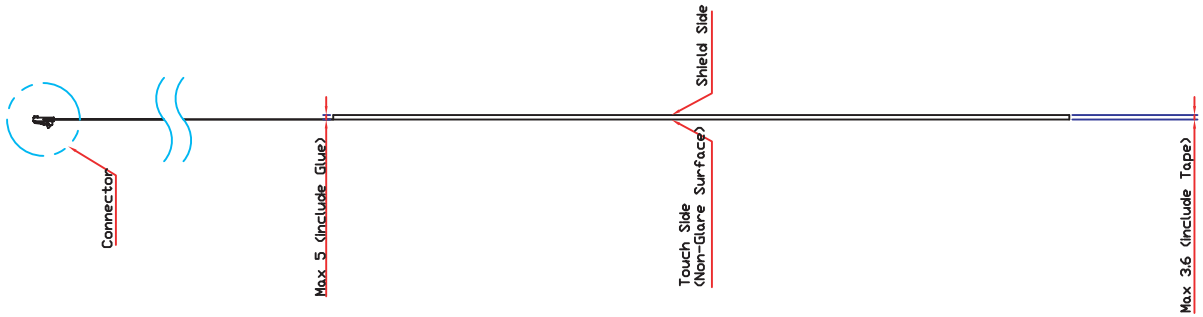

NOTE

1.Panel Type

☐Resistive ■EST Capacitive

2. Thickness (Glass)

■Max 3.6 (3.0)

3.Glass Surface Finish Type

☐Clear ■Non-Glare

4.Transmittance

■Typical 85%

5.Terminal

-Signal

PIN	SIGNAL
1	UR
2	UL
3	SHIELD
4	LL
5	LR

-Diagram

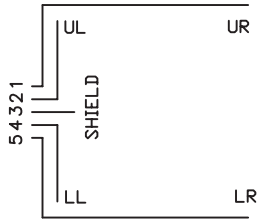

Detail Connector (Scale= 6/1)

HOUSING	AMP P/N 487526-4	PIN (5X)	AMP P/N 487406-1

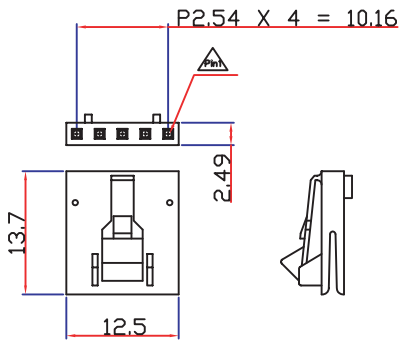

REV.	DATE	DESCRIPTION	BY/APP'D
01	'07.06.08	NEW RELEASE	H.B./J.Y.

NOTICE OF PROPRIETARY PROPERTY

THIS DOCUMENT CONTAINS CONFIDENTIAL AND PROPRIETARY INFORMATION OF Digitech Systems co., Ltd. AND NEITHER IT NOR THE INFORMATION CONTAINED THEREIN SHALL BE DISCLOSED TO OTHERS OR DUPLICATED OR USED FOR OTHERS WITHOUT THE EXPRESS WRITTEN CONSENT OF Digitech Systems co., Ltd.

FFC NO.	SCALE	1/1	DATE	2007.06.08
FF291D15-01	SIZE	A4	DESIG'D	H. B. LEE
THIRD ANGLE PROJECTION	UNIT	MM	CHK'D	—
	STD.TOL	±0.5	APP'D	J. Y. PARK

DRAW. NO EST-220B-01

PRODUCT NO. EST-220B

TouchTEK