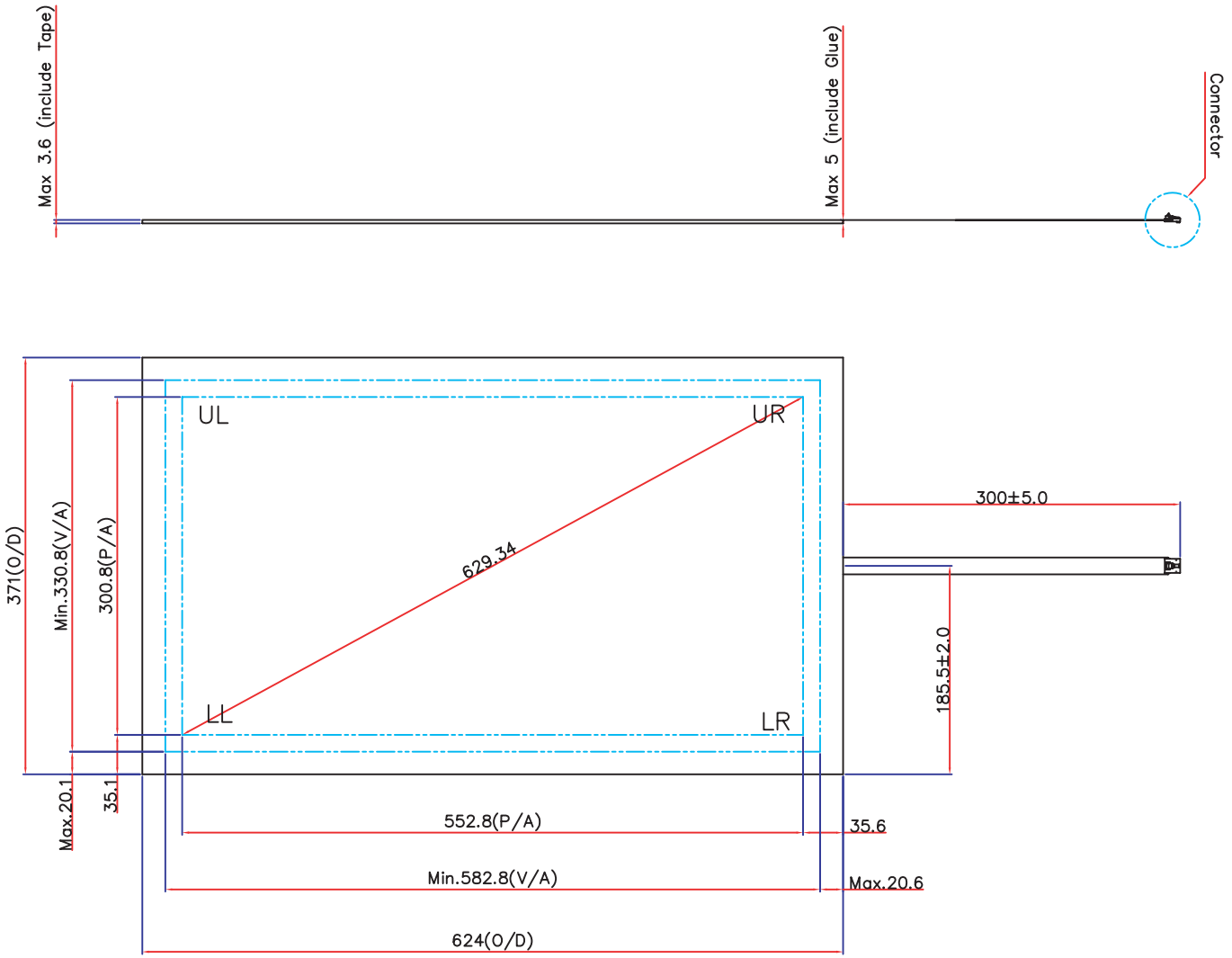

NOTE

1.Panel Type

☐Resistive ■EST Capacitive

2. Thickness (Glass)

■Max 3.6 (3.0)

3.Glass Surface Finish Type

☐Clear ■Non-Glare

4.Transmittance

■Typical 85%

5.Terminal

-Signal

PIN	SIGNAL
1	LL
2	LR
3	SHIELD
4	UR
5	UL

-Diagram

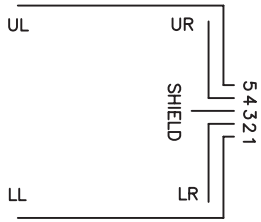

Detail Connector (Scale= 6/1)

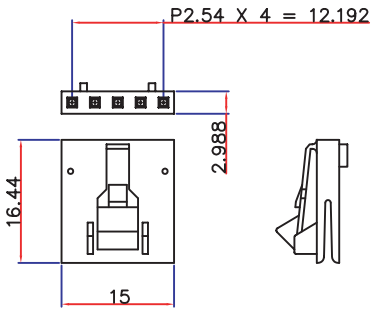

NOTICE OF PROPRIETARY PROPERTY

THIS DOCUMENT CONTAINS CONFIDENTIAL AND PROPRIETARY INFORMATION OF Digitech Systems co., Ltd. AND NEITHER IT NOR THE INFORMATION CONTAINED THEREIN SHALL BE DISCLOSED TO OTHERS OR DUPLICATED OR USED FOR OTHERS WITHOUT THE EXPRESS WRITTEN CONSENT OF Digitech Systems co., Ltd.

REV.	DATE	DESCRIPTION	BY/APP'D
01	'06.04.19	NEW RELEASE	S.H./J.Y.

FFC NO.	SCALE	1/1	DATE	2006.04.19	DRAW. NO EST-260A-01
FF291D15-01	SIZE	A4	DESIG'D	S. H. KIM	PRODUCT NO. EST-260A
THIRD ANGLE PROJECTION	UNIT	MM	CHK'D	—	TouchTEK
	STD.TOL	±1.0	APP'D	J. Y. PARK	